APPD 0700-3C

7” IP65 Industrial WSVGA USB-C
Single-Cable LCD Flush Touch Monitor





Main Features

- IP65 compliant plastic front bezel with flush panel by projected capacitive touch screen
- Single USB-C connection for touch, display, and Power Deliver
- Shares identical appearance with APPC series
- Ultra slim in depth
- Multiple mounting way for easy integration

Product Overview

The 7-inch WSVGA LCD display APPD 0700-3C features a 10-point P-Cap multi-touch screen, 500 cd/m² brightness, and supports resolutions up to 1024 x 600. APPD 0700-3C is ideal for space-constrained environments where systems and displays are separated. Its flush panel design with a slim bezel and IP65-rated front panel ensures durability in demanding industrial settings. APPD 0700-3C offers a single USB-C connection for touch, display, and Power Delivery, simplifying cablling. APPD 0700-3C provides panel mount and VESA mount options for flexible installation. APPD 0700-3C is the perfect companion for NEXCOM NISE fanless computers, NISE 3000 C30 / NISE50 A04-04 series, and APPC1060-A01 panel PCs when a second display is needed.

Specifications

Panel

- LCD size: 7”, WSVGA
- Resolution: WSVGA 1024 x 600
- Luminance: 500cd/m²
- Contrast ratio: 800:1
- LCD Color: 16.7M
- Viewing angle: 80 (U), 80 (D), 80 (L), 80 (R)
- Backlight: LED

Touch Screen

- Ten points P-Cap (projected capacitive touch)
- Touch light transmission: 85%
- Anti-scratch surface: 7H hardness
- Touch interface: USB

I/O Interface Rear

- 1 x USB-C: Touch Signal / Alt Mode DP signal / DC15V ±20% Power Input

OSD Function

- OSD keypad

Environment

- Vibration:
  - 2G@sine, 5~500Hz, 1hr/axis (operating), IEC 60068-2-6
  - 2Grms@random condition, 5~500Hz, 0.5hr/axis (operating), IEC 60068-2-64
- Shock:
  - 20G@wall mount, half sine, 11ms (operating), IEC 60068-2-27
- Temperature:
  - Operating temperature: 0°C~50° (Ambient with air flow)
  - Storage temperature: -20°C~75°C
- Operating humidity: 10%~90%, non-condensing

Mechanical

- Color: Black silver
- IP protection: IP65 front
- Mounting: Panel/VESA 75mm x 75mm
- Power
  - Power input: 15V DC ± 20%
- Dimension: 198.4mm (W) x 138.9mm (H) x 24.2mm (D)
- Weight: 0.9kg

Certifications

- CE approval (EN 55032, EN 55035)
- FCC Class B

Copyright © 2024 NexAIoT Co., Ltd. All Rights Reserved.

Dimension Drawing

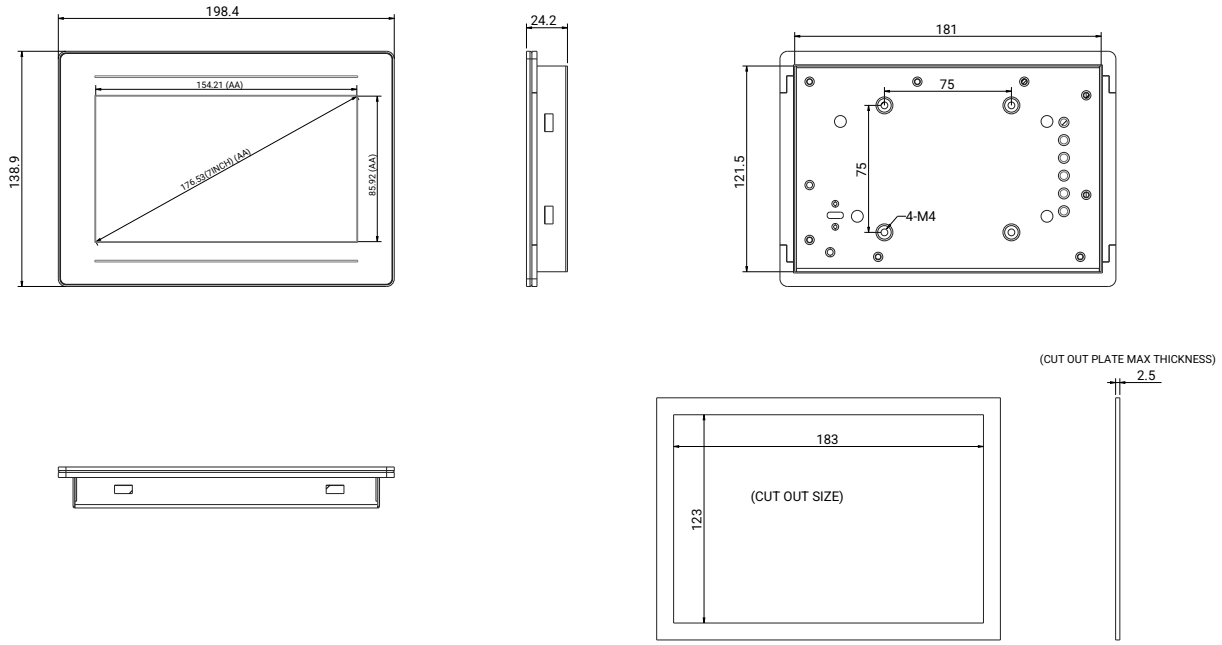

Ordering Information

- **APPD 0700-3C (P/N: 10IA0070000XE)**
  7" IP65 Industrial WSVGA USB-C Single-Cable LCD Flush Touch Monitor

We reserve the right to change specifications and product descriptions at any time without prior notice.