ATC 3760-IP7-T5F

High Performance NVIDIA® Jetson Thor™
IP67 Edge AI Computer for In-vehicle Applications





Main Features

- Built-in NVIDIA® Jetson Thor™ SoM, delivering up to 2,070 TFLOPS (FP4) AI performance
- Rugged, high-protection design with IP67-rated enclosure
- 1 x 10GbE and 1 x 2.5GbE LAN ports for high-speed uplink
- H.265 (HEVC) and H.264 hardware decoding
- Wide range operating temperature of -25°C~60°C
- Ultra-speed PCIe 5.0 x4 NVMe SSD for data integrity
- Expansible for GNSS, LTE/5G NR & Wi-Fi 7
- DC 9V~36V/24V power input with ignition control & OCP/UVP
- NEXCOM Acceleration Linux (NAL) integrated w/ JetPack 7.x
- Military standard of MIL-STD-810H for anti-vibration/shock
- CE/FCC, UKCA, E-mark, and EN 50155 certified

Product Overview

Powered by the high-performance NVIDIA® Jetson Thor™ System-on-Module (SoM), the NEXCOM ATC 3760-IP7-T5F AI edge computer delivers an impressive AI inference workload capability of up to 2,070 TFLOPS. These robust capabilities seamlessly support demanding applications like AI inference across diverse industry sectors, including transportation, construction, warehouse management, agriculture, factory automation, and railway safety assurance.
This IP67-rated, rugged in-vehicle and rail computer features an efficient active cooling system capable of withstanding extreme temperatures ranging from -25°C to 60°C. The ATC 3760-IP7-T5F conforms strictly to the rigorous MIL-STD-810H military standards for high shock and vibration resistance. Featuring DC 9V to 36V or DC 24V power input and intelligent ignition control, the platform is equipped with a high-speed 10GbE port, and a 2.5GbE port to provide reliable, high-bandwidth connectivity for external LAN switch to connect peripheral IP cameras and LiDAR sensors. Furthermore, integration with 5G NR, Wi-Fi, and GNSS modules guarantees precise localization and uninterrupted communication with central control hubs. Fully compliant with international regulatory mandates, the series holds comprehensive certifications including CE/FCC Class A, UKCA, EN 50155 (OT3), and E-mark (E13).

Specifications

Platform

- NVIDIA® Jetson T5000™
  - CPU: 14-core Arm® Neoverse®-V3AE v9.2-A 64-bit
  - GPU: 2560-core NVIDIA® Blackwell architecture with 96 Tensor Cores
  - Memory: 128GB 256-bit LPDDR5x, 273GB/s
  - AI performance: 2070 TFLOPS (FP4 - sparse)

Display Interface

- 1 x HDMI® 2.1, up to 8K@30Hz

Storage

- 1 x 1TB M.2 Key M 2280 NVMe SSD (PCIe 5.0 x4), up to 4TB

Sensor

- 3D accelerometer and 3D gyroscope, ST LSM6DSLTR
- GNSS
  - VIOB-GPS-07 (u-blox NEO-M9N) for GPS/GLONASS/QZSS/Galileo/Beidou
  - Optional DR (NEO-M9V), F9P, F9R, X20P. Supports 1PPS signal to SoM and output

Expansion Slot

- 1 x Full-size Mini PCIe slot (PCIe 4.0 + USB 2.0)
- 1 x M.2 Key B 3042/3050/3052 (WWAN) for an LTE/5G module
- 1 x M.2 Key E 2230/3052 (WLAN/BT) for a Wi-Fi 7 module

I/O Interface Front

- 2 x USB 3.2 M12 X-coded connector
- 1 x 10GbE M12 X-coded connector
- 1 x 2.5GbE M12 X-coded connector
- 1 x HDMI®
- 1 x 6-pin M8 A-Coded connector (AUDIO)
  - 1 x Line out, left/right channel stereo
  - 1 x Mic in, left/right channel
- 2 x nano-SIM slot (w/ door cover)
- 1 x 5-pin M8 connector for fan kit
- 1 x OTG, USB Type-C (w/ door cover)
- 1 x Ignition connector
- 1 x SMA for GNSS
- 2 x RP-SMA for Wi-Fi
- 4 x SMA for LTE/5G
- 1 x 17-pin A-coded connector (MULTI1 port)
  - 2 x CAN FD SIC
  - 4 x DI + 4 x DO
- 1 x 17-pin A-coded connector (MULTI2 port)
  - 1 x Isolated RS-232/422/485 (Tx/Rx/RTS/CTS)
  - 1 x Console (RS-232), baud rate 115200
  - Remote PWR button/RESET + 1PPS + DR
- 1 x K-coded connector for DC 9V~36V/rail 24V power input

I/O Interface Rear

- Pressure relief vent

Dimension Drawing

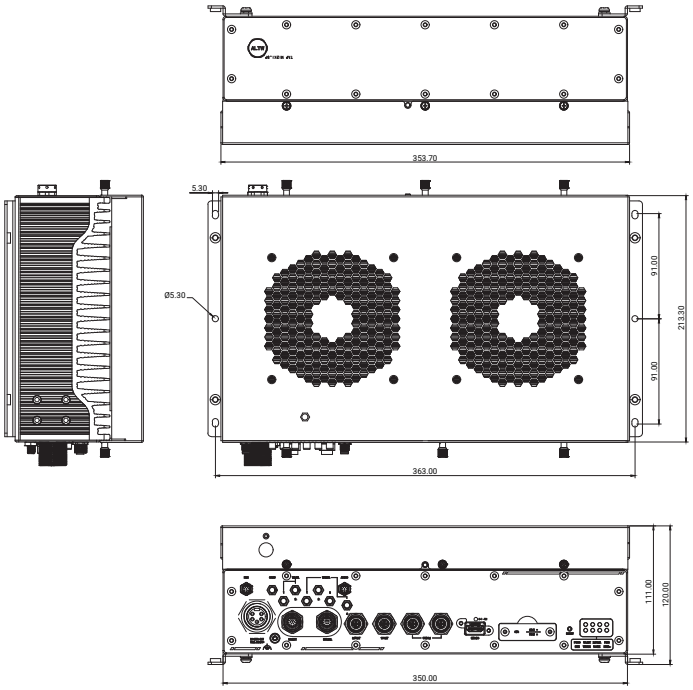

CAN bus

- 2 x CAN FD SIC (internal 2 x CAN FD SIC reserved), compatible with CAN 2.0A/2.0B
  - IEC 61000-4-2 Electrostatic Discharge (ESD): ± 8KV/15KV (contact/air)
  - 2.5KV isolated, transceiver supports CAN FD SIC

DI/DO (isolation)

- 4-bit input
  - Source: DC 9V~36V (12V@1.1mA/24V@2.2mA)
  - External: DC 0V~33V pull-high, high-level, DC 3.3V~33V; low-level, DC 0V~2V
- 4-bit output
  - Source: DC 9V~36V (nominal 35mA@24V)
  - External: DC 5V~30V pull-high, sink current w/ 500mA for each bit, 500mA max (@25°C)

System Capabilities

- Watch Dog Timer

Power Management

- Nominal voltage: DC 9V~36V/DC 24V rail (non-isolation)
- Reverse protection/over voltage protection/OCP with field replaceable fuse
- Ignition on/off control & programmable on/off delay timer
- System wake up (ignition/cellular) & soft off (UVP threshold)
- Remote ATX PWR and reset trigger are available

Mechanical

- Dimensions: 350.0mm (W) x 210.0mm (D) x 82.0mm (H), w/o wall mount bracket
- Weight: 8.95kg

Environment

- Operating temperature: -25°C~60°C, w/ fan kit
- EN 50155 (OT3): -25°C~70°C
- Storage temperature: -40°C~85°C
- Relative humidity: IEC 60068-2-78, damp heat steady state test, 40°C, 95%, 48Hrs
- Vibration in operating:
  - MIL-STD-810H, 514.8C Procedure 6, Category 4
  - IEC 60068-2-64: 2.0g for SSD
- Vibration in storage:
  - MIL-STD-810H, 514.8E Procedure 1, Category24
- Shock:
  - Operating: MIL-STD-810H, 516.8 Procedure I, trucks and semi-trailers=40g
  - Non-operating: MIL-STD-810H, Method 516.8 Procedure V, crash hazard shock test=75g

Certifications

- CE, FCC class A, UKCA
- E13 (CAN read only)
- EN 50155 (EN 55011, EN 50121-3-2, EN 61373, OT3)
- EN 45545-2

Operating System

- NEXCOM Aided Linux (NAL) w/ Jetpack 7.x integrated
  - Ubuntu 22.04 (L4T 36.3, Linux kernel 5.15)

Ordering Information

- **ATC 3760-IP7-T5F (P/N: 10AT0376008X0)**
  NVIDIA® Jetson T5000™ SoM, 128GB LPDDR5X, 1TB NVMe, 1 x 2.5GbE, 1 x 10GbE, 2 x USB 3.2, 1 x RS-232/422/485, 1 x Console (RS-232), OTG, IP67, DC 9V~36V/non-iso DC 24V, with fan kit

We reserve the right to change specifications and product descriptions at any time without prior notice.