# VTC 6120

**Intel® Core™ 2 Duo SL9400 Fanless In-Vehicle Computer**

VTC 6110 with optional IP65 enclosure

## Main Features

- Support Intel® Core™ 2 Duo SL9400 processors
- Availability of GSM/ GPRS/ WCDMA/ HSDPA/ GPS
- External smart battery back up support
- Power ignition on/off delay control
- Circuitry design for low power protection
- 6~36V DC power input
- 1 PCI-104 expansion slot
- Multiple display interface connections (VGA, DVI-D and LVDS)
- Optional IP65 enclosure

## Product Overview

The VTC 6120 is an innovative in-vehicle computer for use in any car, truck, or even for maritime applications. The design itself makes the system available as a complete system allowed the user easily define and build requirements. The VTC 6120 fulfills vehicle industry requirements. The design itself is in compliance with vehicle industrial standard such as eMark. More features required for in-vehicle operations, such as power ignition delay control, low-power protection and SMBus connection, etc., are continued from others of NEXCOM's in-vehicle computer products. The GPS function navigates drivers to ultimate the fleet management. Optional 802.11b/g/n, 3.5G, and Bluetooth availability make the VTC 6120 ready for wider coverage and future trend. Multiple display connections make the VTC 6120 an ideal choice for in-vehicle signage platforms as well.

## Specifications

### Main Chipset
- Intel® GS45 and ICH9M chipset

### CPU
- Support Intel® Core™ 2 Duo SL9400 processors

### Memory
- DDR3 1066/ 1333 MHz SO-DIMM up to 2GB

### Expansion
- 1 x PCI-104
- 1 x Bluetooth module (optional)
- 2 x Mini-PCI express socket

### I/O Interface-Front
- 4 x SMA Antenna holes for WLAN, HSDPA, Bluetooth
- 1 x Power button
- 1 x Reset switch
- 1 x SIM socket
- 1 x USB
- 4 x LED's for Stand-by, HDD, WLAN/HSDPA and GPIO
- 1 x Mic-in & 1 x Line-out

### I/O Interface-Rear
- 2 x RS-232
- 1 x RS-232/485 w/ auto flow control
- 1 x DB26 LVDS (w/ +12V for backlight power & USB2.0)
- 1 x DB15 VGA
- 1 x DVI-D
- 2 x USB2.0
- 1 x 10/ 100/ 1000 Ethernet
- 1 x Mic-in & 1 x Line-out
- 1 x SMA antenna hole for GPS
- 1 x GPIO (4 input & 4 output)
- 6V ~ 36V DC thru 3-pin connector (ignition, power & ground)
- +5V/+12V DC output, SMBus
  5V DC (1A), 12V DC (1A), without VTK 33M-01
  5V DC (0.5A), 12V DC (0.5A), with VTK 33M-01

### Expandable Storage
- 1 x 2.5" SATA II HDD + 1 x CF

### Power Management
- Boot-up & shut-down voltage setting selectable for low power protection by software
- Setting 8-level on/off delay time by software
- Status of ignition and low voltage status can be detected by software

## Dimension Drawing

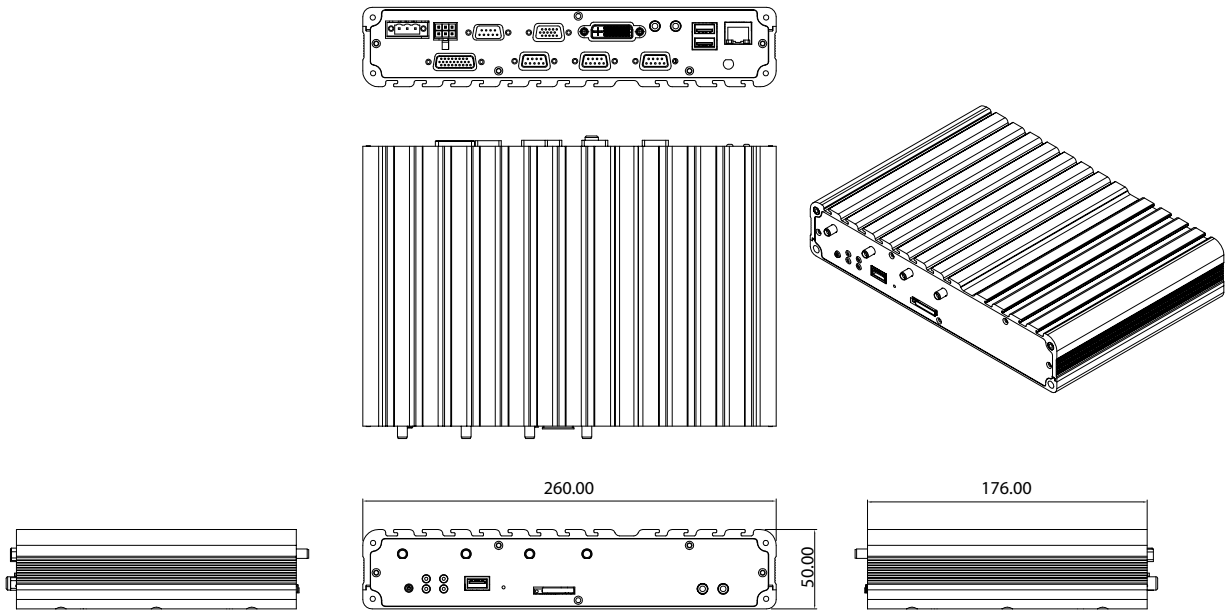


### IP Rating
- IP65 compliant (w/ VTK 61P)

### Dimensions
- 260mm (W) x 176mm (D) x 50mm (H) (10.24" x 6.93" x 1.97")
- 2.42 Kg (5.34 Lb)

### Construction
- Aluminum enclosure with fanless design

### Environment
- Operating temperatures:
  -30°C to 50°C (SSD)
  -30°C to 45°C (commercial HDD)
- Storage temperatures: -40°C to 80°C
- Relative humidity: 10% to 90% (non-condensing)
- Vibration
  (random) : 2g @ 5~500 Hz with SSD; 1g @ 5~500 Hz with HDD (in operation)
  (sine): 2g @ 5~500 Hz with SSD; 2g @ 5~500 Hz with HDD (non operation)
- Vibration (with SSD)
  Operating: MIL-STD-810F, Method 514.5, Category 20, Ground Vehicle - Highway Truck
  Storage: MIL-STD-810F, Method 514.5, Category 24, Integrity Test
- Shock (with SSD):
  Operating: MIL-STD-810F Method 516.5, Proceure I, Trucks and semi-trailers=20g
  Non-operating: MIL-STD-810F, Method 516.5, Procedure V, Ground equipment=75g

### Certifications
- CE approval
- FCC Class B
- e13 Mark

## Ordering Information

- **VTC 6120 (P/N: 10V00612000X0)**
  Intel® Core™ 2 Duo SL9400 processor, 1GB DDR3, GPS module and GPS antenna

- **Optional Accessories**

| Part No. | Description |
|---|---|
| 10VD0100000X0 | VMD 1000-B 7" monitor w/ touch screen |
| 10VK33M0100X0 | VTK 33M-01 8.4" monitor w/ touch screen |
| 10VK0033V00X0 | VTK 33V, anti-vibration/ fan Kit |
| 10VK0061B00X0 | VTK 61B, back-up battery kit for 4 hours in system full loading |
| 10VK0060P00X0 | VTK 60P, IP65 protection kit for VTC 6000 |
| 10VK0061P00X0 | VTK 61P, IP65 protection pit for VTC61 XX series & VTC 6200-NI |
| 10VK0006013X0 | Wireless mini card kit, Ralink 802.11b/g/n 2T2R, QCOM: Q802XKN5F, w/ antenna & cable (without assembly in NEXCOM) |
| 10VK0006000X0 | Sierra MC 8790V kit, GPRS/ UMTS/ HSDPA, w/ internal cable, antenna & packing (without assembly in NEXCOM) |
| 10VK0006007X0 | Bluetooth kit, QCOM: QBTM400-01 (V7), w/ antenna & cable (without assembly in NEXCOM) |
| 10VK0006004X0 | GPS kit, GlobalSat: EM-313 w/ antenna & cable (without assembly in NEXCOM) |
| 7400120002X00 | Power adapter FSP: 120-AAB (N09001), 120W 19V/ 6.3A |
| 60233SAM03X00 | Internal cable for GSM/ WLAN/ GPS antenna connection MOQ: 20 pcs |
| 60233SAM05X00 | GPS antenna/ 5m/ SMA180P |
| 60233SAM07X00 | GSM/GPRS antenna, SMA, support 850/ 900/ 1800/ 1900 |
| 60233SMA30X00 | GPS+GSM combo antenna 5M/ SMA180P |
| 60233SAM17X00 | GPRS/ UMTS/ HSDPA antenna, SMA, support 850/ 900/ 1800/ 1900/ 2100 |


We reserve the right to change specifications and product descriptions at any time without prior notice.